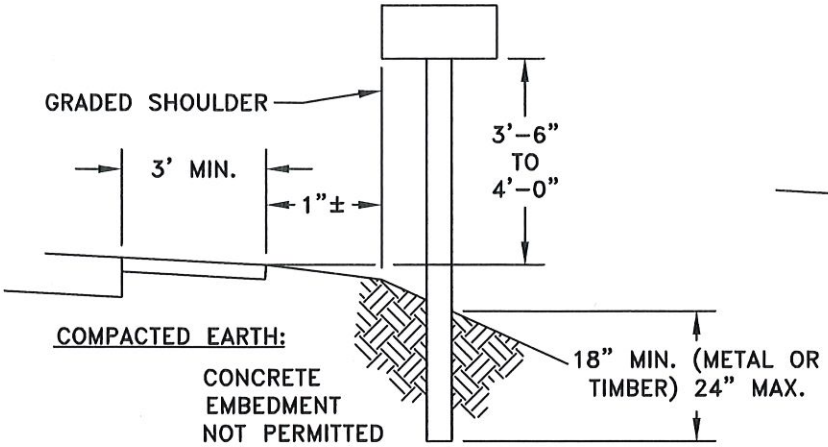

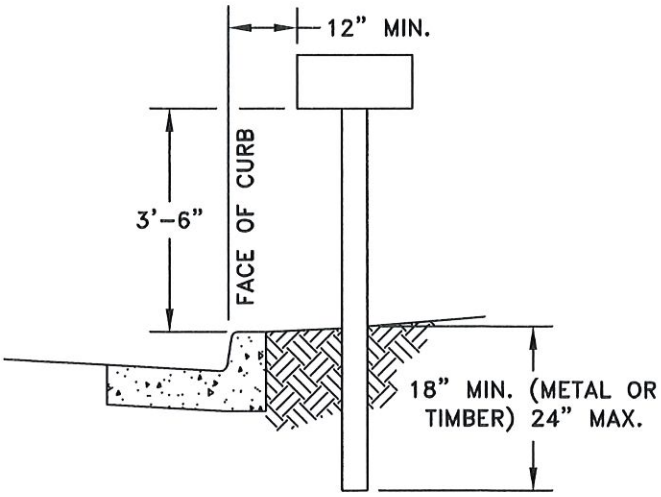

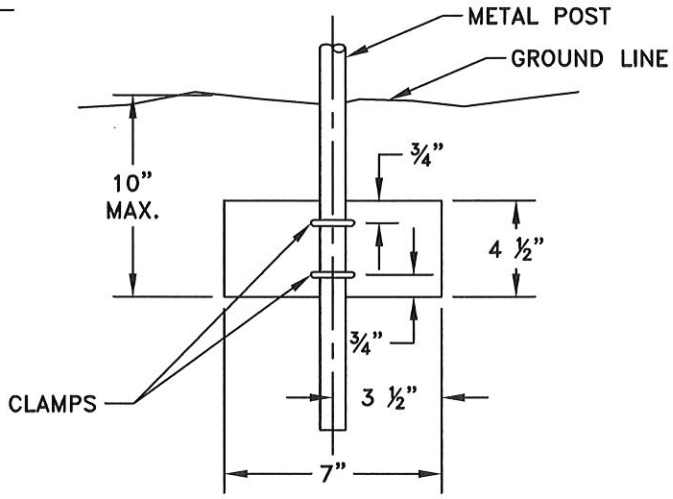

ANTI-TWIST PLATE

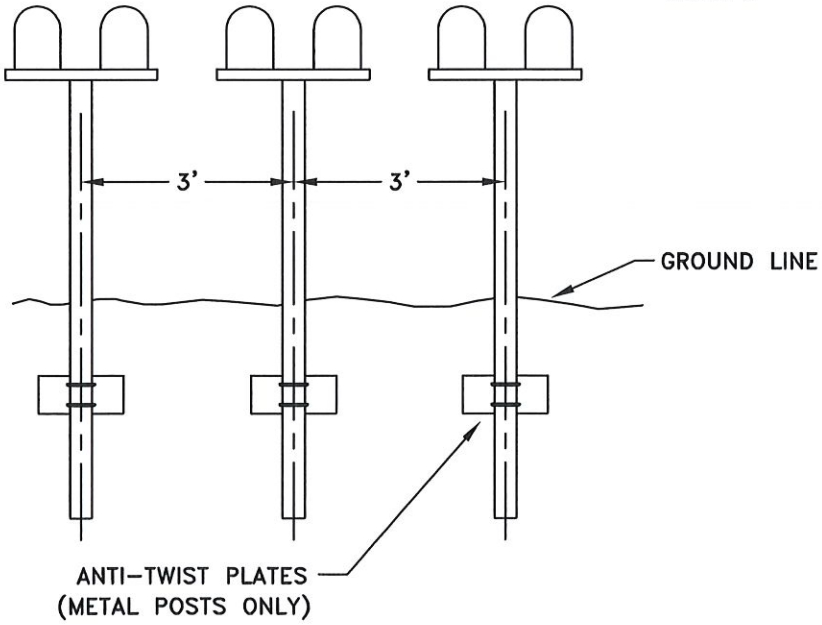

SEE SHEET 2 FOR
INSTALLATION POLICY

APPROVED 7-13-20 Mital Nolan CITY ENGINEER REVISED: 13 JUL 20	MAILBOX INSTALLATION	CITY OF LANCASTER, OHIO DEPARTMENT OF ENGINEERING STANDARD CONSTRUCTION DRAWING DWG. BY: ADH CHK'D BY: MN FILE NUMBER M-4 SHEET 1 OF 2

MAILBOX INSTALLATION POLICY

ALL MAILBOX UNITS, ATTACHMENTS, DECALING, SUPPORTS AND INSTALLATION THEREOF ARE TO BE IN STRICT ACCORDANCE WITH THE UNITED STATES POSTAL REGULATIONS AND IN COMPLIANCE WITH THE FOLLOWING:

1. THE MAILBOX UNIT SHALL BE ENTIRELY OF PLASTIC AND OR LIGHTWEIGHT GALVANIZED STEEL CONSTRUCTION. NEWSPAPER DELIVERY BOXES SHALL BE OF THE SAME TYPE OF CONSTRUCTION AND OF MINIMUM DIMENSIONS SUITABLE FOR HOLDING NEWSPAPERS.

2. THE MAILBOX UNIT TO SUPPORT ATTACHMENT SHOULD BE OF SUFFICIENT STRENGTH TO PREVENT THE BOX FROM SEPARATING FROM THE POST TOP IF STRUCK BY A VEHICLE.

3. THE SUPPORT STRUCTURE (POST) SHALL BE OF A BREAKAWAY NATURE; SINGLE 4" x 4" x 4 ½" DIAMETER WOODEN POST; OR A METAL POST WITH A STRENGTH NO GREATER THAN A 2" DIAMETER STANDARD STRENGTH STEEL PIPE (WITH A WEIGHT NOT IN EXCESS OF 2.6 LBS. PER FOOT) AND EMBEDDED NO MORE THAN 24" INTO THE GROUND. A METAL POST SHALL NOT BE FITTED WITH AN ANCHOR PLATE, BUT IT MAY HAVE AN ANTI-TWIST DEVICE THAT EXTENDS NO MORE THAN 10" BELOW THE GROUND SURFACE. MAILBOX SUPPORTS SHALL NOT BE SET IN CONCRETE.

4. MULTIPLE MAILBOX UNITS OF MORE THAN TWO BOXES MAY NOT BE MOUNTED ON ONE SUPPORT UNLESS THE SUPPORT STRUCTURE AND MAILBOX ARRANGEMENT HAVE BEEN SHOWN TO BE SAFE BY CRASH TESTING. HOWEVER, LIGHTWEIGHT NEWSPAPER BOXES MAY BE MOUNTED BELOW THE MAILBOX ON THE SIDE OF THE MAILBOX SUPPORT.

5. THE MINIMUM SPACING BETWEEN THE CENTERS OF SUPPORTS (POST) SHALL BE 3' BETWEEN POSTS.

6. THE UNIT SHALL BE PLACED AT AN OFFSET FROM THE EDGE OF THE TRAVELED WAY TO INSURE THAT THE ROADSIDE FACE OF THE MAILBOX IS 12" OUTSIDE THE ALL-WEATHER SURFACE OF THE SHOULDER. WHEN A MAILBOX IS INSTALLED IN THE VICINITY OF THE EXISTING GUARDRAIL, IT SHALL BE PLACED BEHIND THE GUARDRAIL.

7. ANY MAILBOX OR MAILBOX INSTALLATION DEEMED TO BE HAZARDOUS TO TRAFFIC SHALL BE REMOVED FROM THE PUBLIC RIGHT-OF-WAY.

APPROVED 7-13-20 Michael Nolan CITY ENGINEER	MAILBOX INSTALLATION	CITY OF LANCASTER, OHIO DEPARTMENT OF ENGINEERING
		STANDARD CONSTRUCTION DRAWING
REVISED: 13 JUL 20		DWG. BY: ADH CHK'D BY: MN FILE NUMBER M-4 SHEET 2 OF 2